1

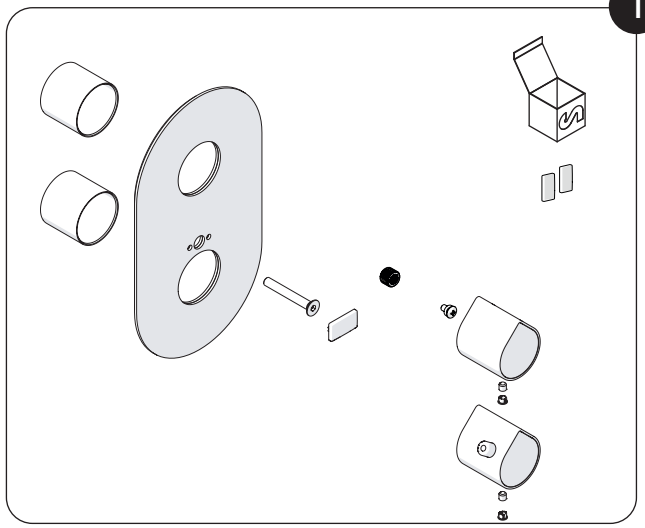

+

Not included / Non incluso /Non Inclus / Nie zawarty/ No incluido / Nao incluido

2

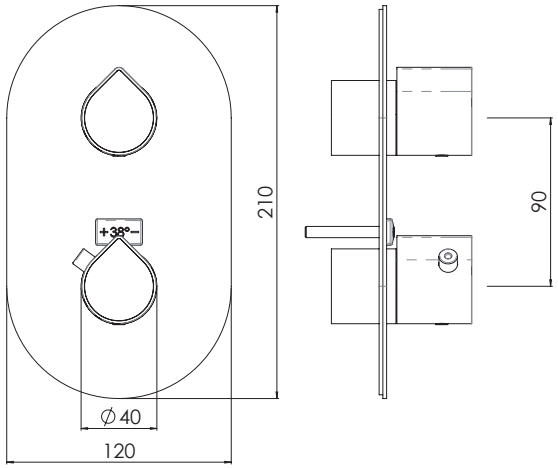

3

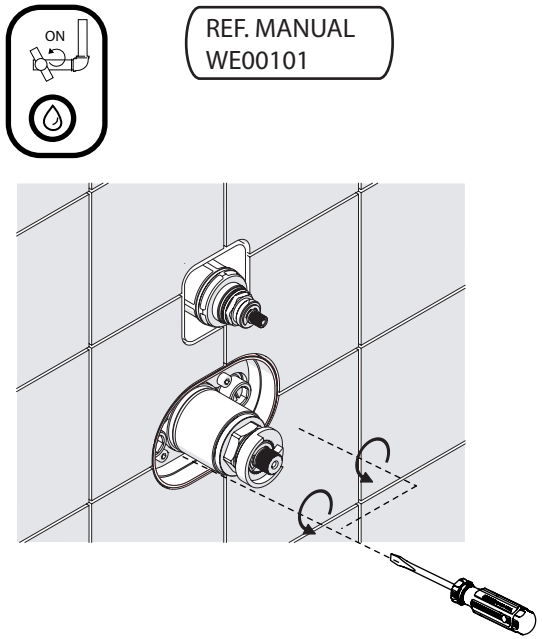

REF. MANUAL
WE00101

4

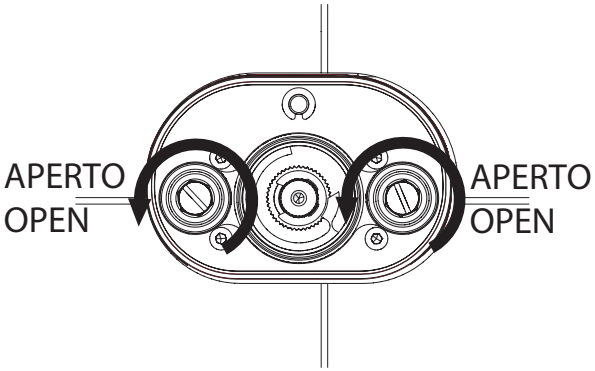

5

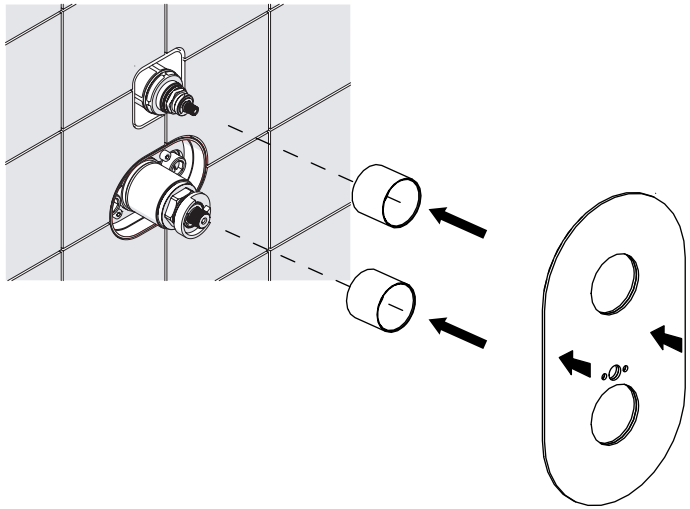

6

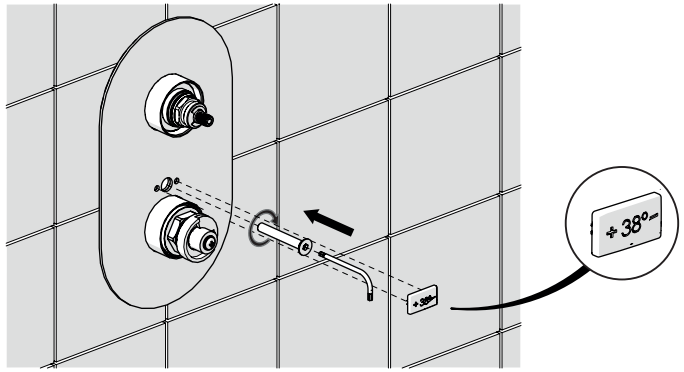

7

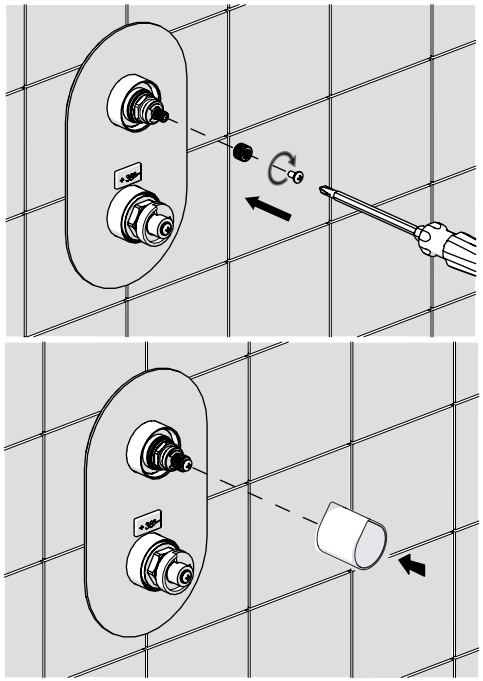

8

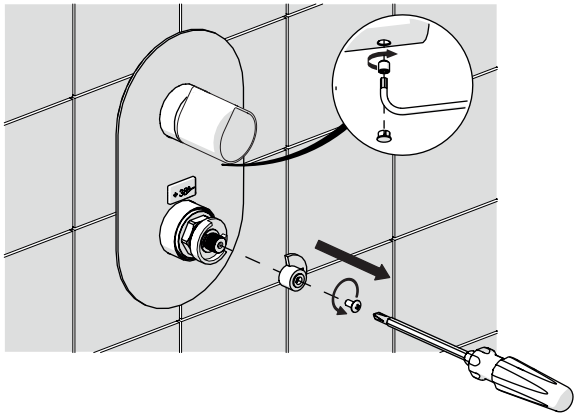

9

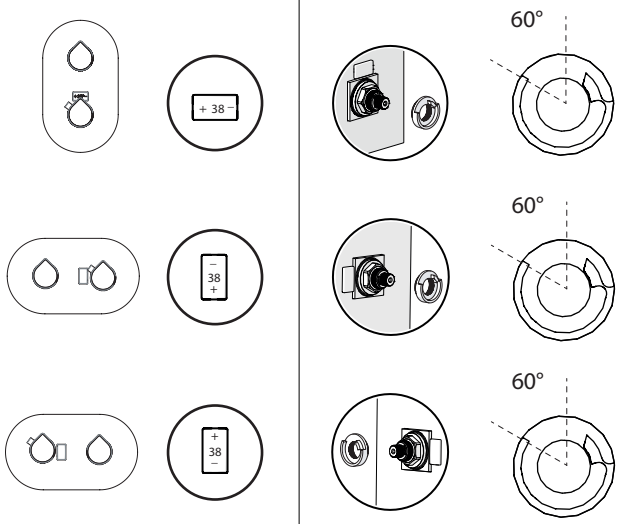

10

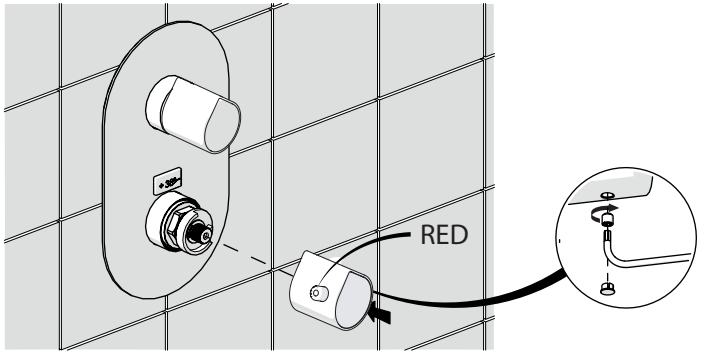

NOBILI®

The Best Technology for Water

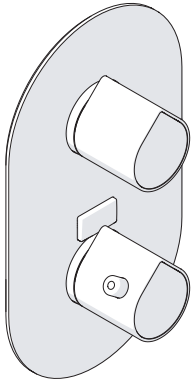

DS106101

www.grupponobili.it

PRIMA DI INIZIARE / BEFORE STARTING

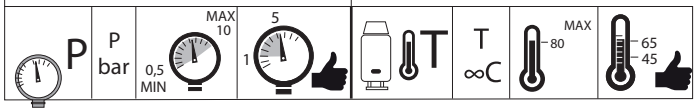
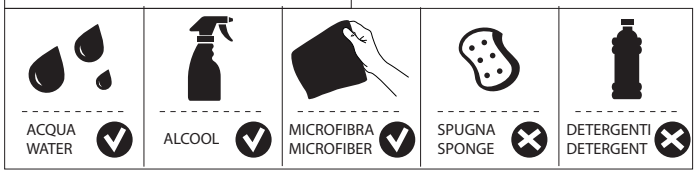
PULIZIA / CLEANING