SANITARY FITTINGS

AS35300/BCR

NOBILI

SPECIFICATIONS

Timed wall mounted tap
Chrome
ø 1/2” connection
Pushbutton control
15” outflow angle
5 possible outflow rates
Packaging: 14 x 12,5 x 8 cm / 0,0014 m^3 / 0,55 kg

carlo nobili spa rubinetterie - via novara 29, suno (no) italia - office +39 0322 885885 - fax +39 0332 858091 - mail info@nobili.it - web nobili.it

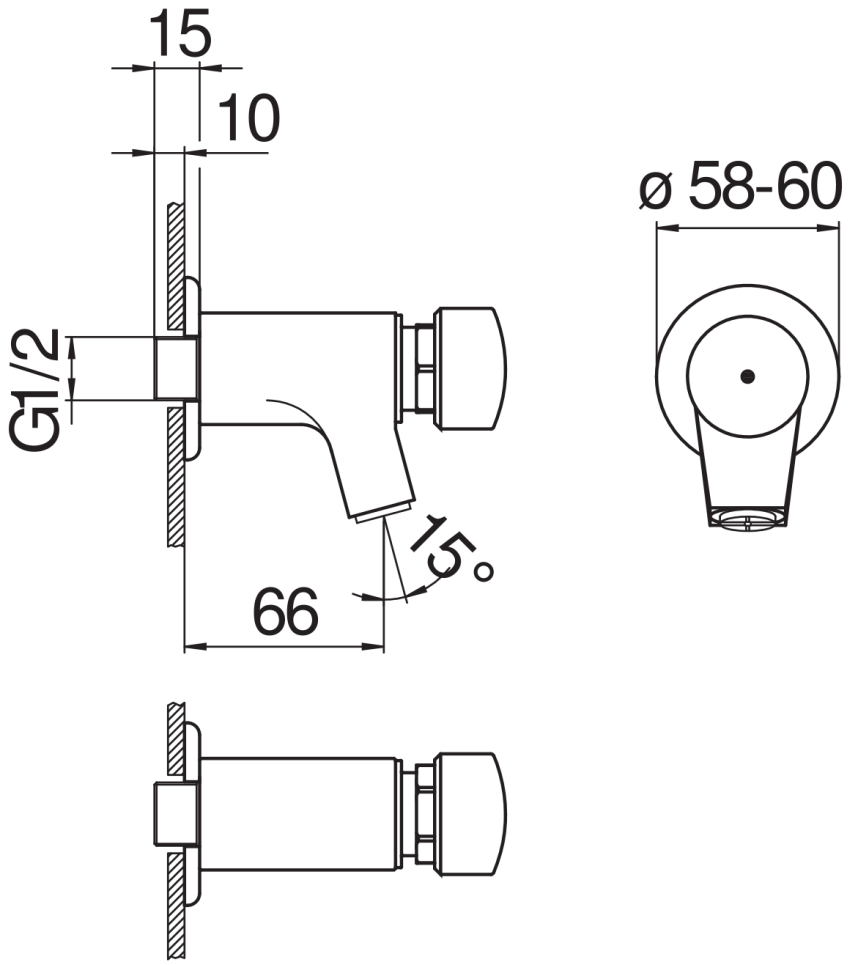
15
10
ø 58-60
G1/2
15°
66