ACCESSORIES

AV00100/10BR

NOBILI

SPECIFICATIONS

Tub column

Ancient bronze

Movement "direct"

Packaging: 70 x 9 x 8,5 cm / 0,00536 m^3 / 1,13 kg

carlo nobili spa rubinetterie - via novara 29, suno (no) italia - office +39 0322 885885 - fax +39 0332 858091 - mail info@nobili.it - web nobili.it

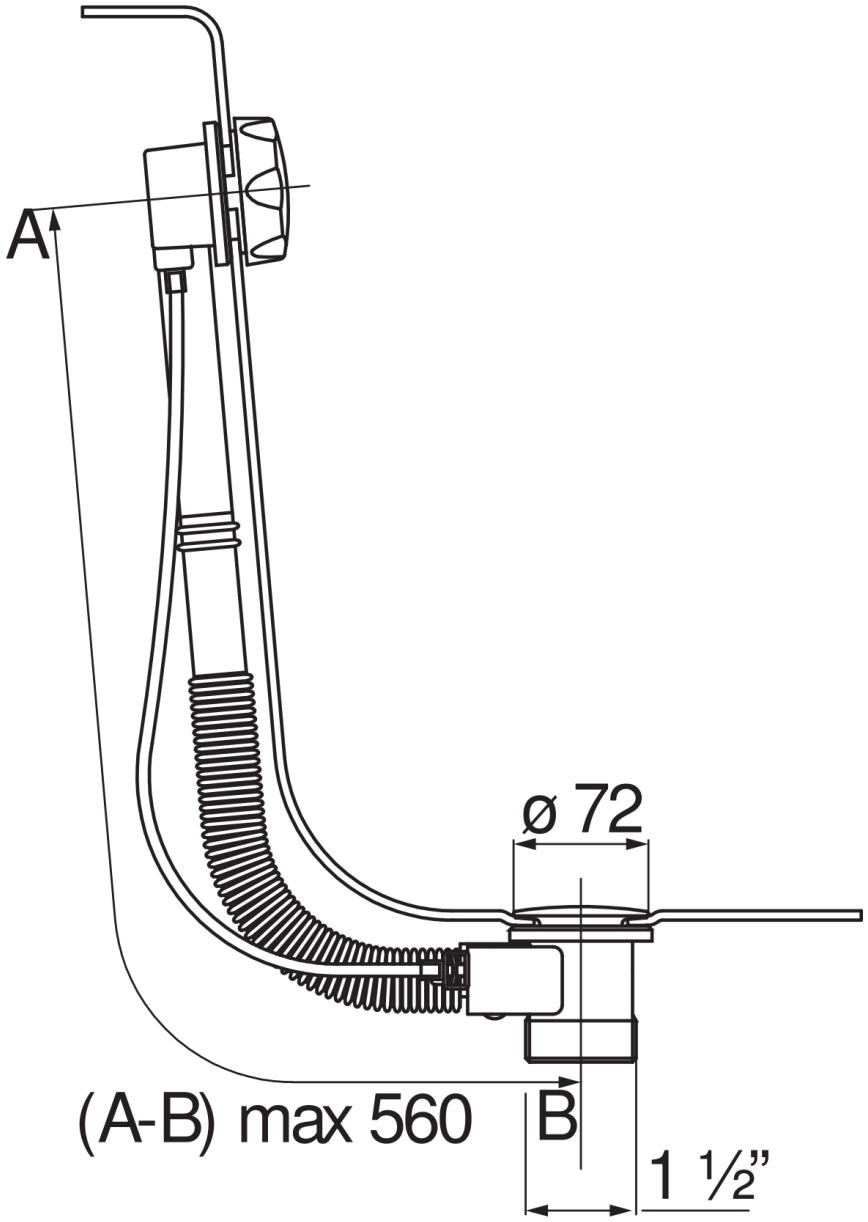
A
ø 72
(A-B) max 560
B
1 ½”