ACCESSORIES

AV00109/3CR

NOBILI

SPECIFICATIONS

Low profile syphon

40 - 50 mm PP terminal

Packaging: 0,123 kg

carlo nobili spa rubinetterie - via novara 29, suno (no) italia - office +39 0322 885885 - fax +39 0332 858091 - mail info@nobili.it - web nobili.it

AV00109/3CR
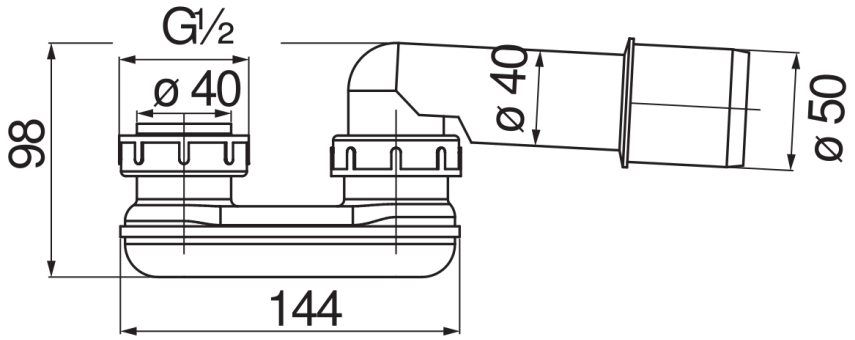
NOBILI