DRESS

# DS106118/1TNI

NOBILI

SPECIFICATIONS

Single control
Inox T.E.A.+
Anti limescale aerator M 24 x 1
1 1/4" waste with patented SNAP system
ø 3/8" stainless steel flexible pipe
50% two step cartridge for water saving
Packaging: 41 x 21 x 7 cm / 0,006066 $m^3$ / 2,327 kg

CERTIFICATIONS

ATTESTATION DE CONFORMITE SANITAIRE ACS

carlo nobili spa rubinetterie - via novara 29, suno (no) italia - office +39 0322 885885 - fax +39 0332 858091 - mail info@nobili.it - web nobili.it

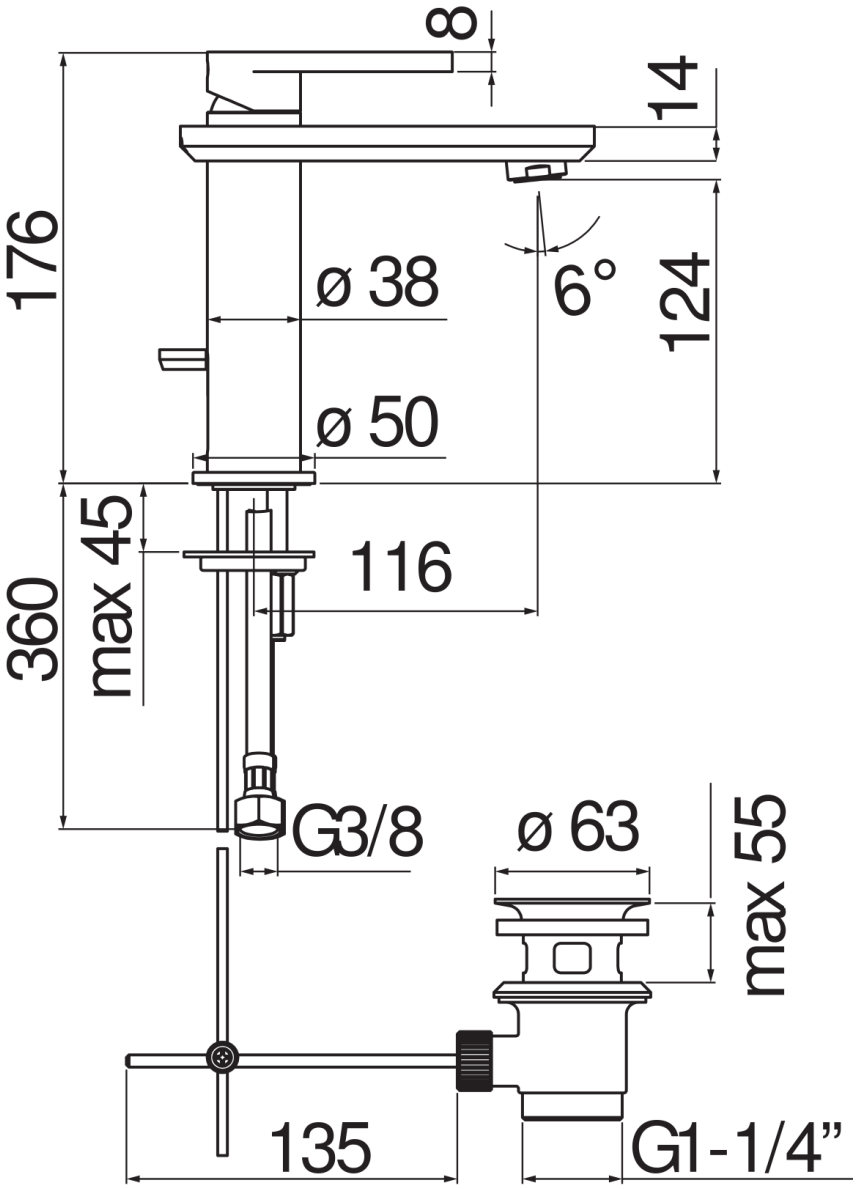
8
14
176
ø 38
6°
124
ø 50
360
max 45
116
G3/8
ø 63
max 55
135
G1-1/4”

FLOW RATE DIAGRAM: HOT/COLD WATER

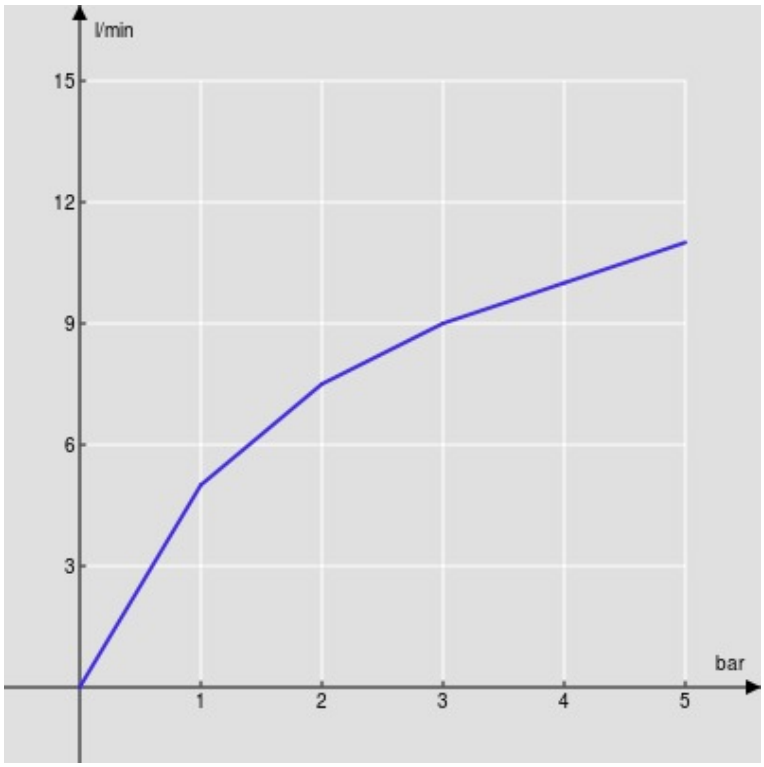


Aerator

FLOW RATE DIAGRAM: MIXED WATER

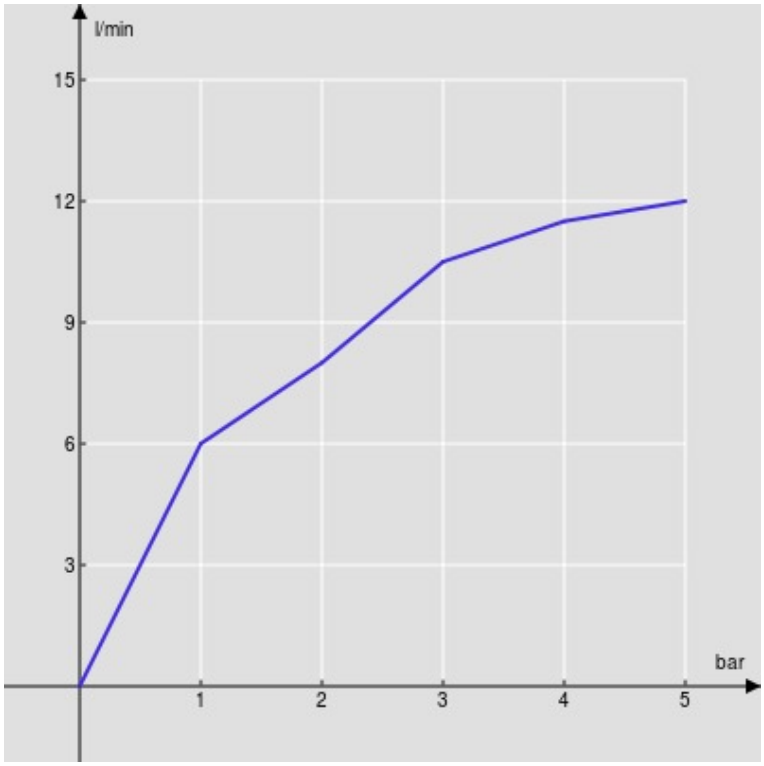


Aerator