DRESS

DS106119/1C07

NOBILI

SPECIFICATIONS

Single control
Chrome
Anti limescale aerator M 16,5 x 1, swivel jet
1 1/4" waste with patented SNAP system
ø 3/8" stainless steel flexible pipe
50% two step cartridge for water saving
Packaging: 41 x 21 x 7 cm / 0,006066 m^3 / 2,00 kg

CERTIFICATIONS

carlo nobili spa rubinetterie - via novara 29, suno (no) italia - office +39 0322 885885 - fax +39 0332 858091 - mail info@nobili.it - web nobili.it

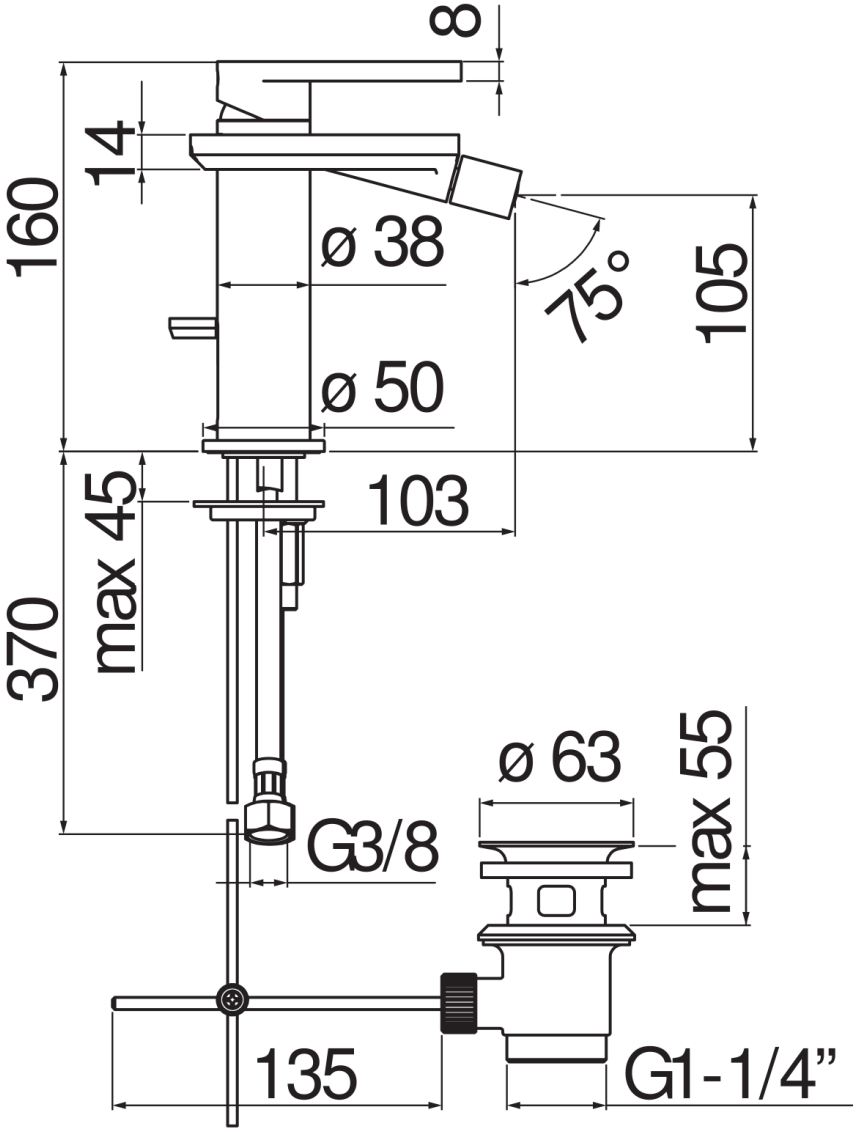
8
14
160
ø 38
75°
105
ø 50
103
max 45
370
ø 63
max 55
G3/8
135
G1-1/4”

FLOW RATE DIAGRAM: HOT/COLD WATER

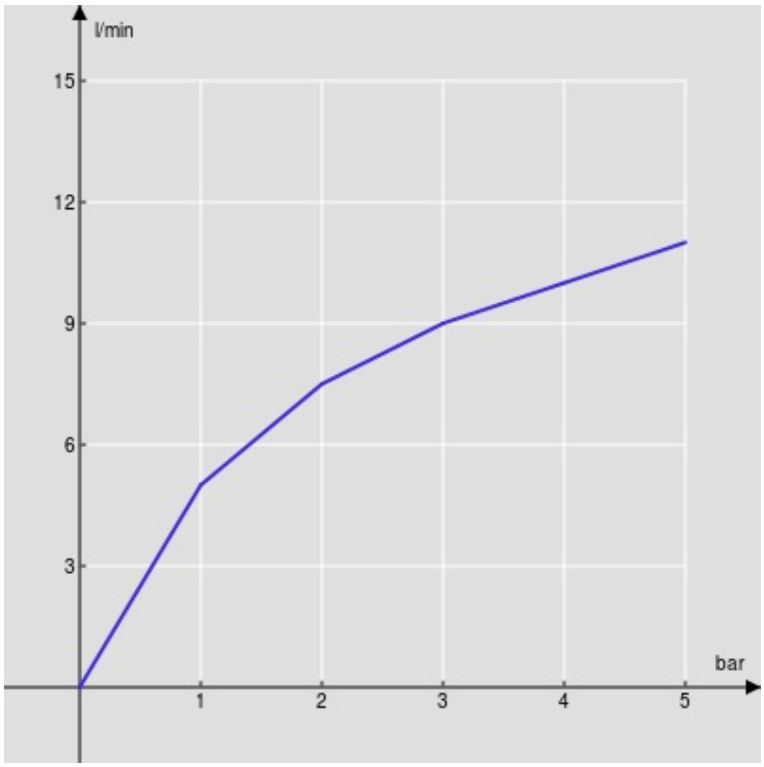

Aerator

FLOW RATE DIAGRAM: MIXED WATER

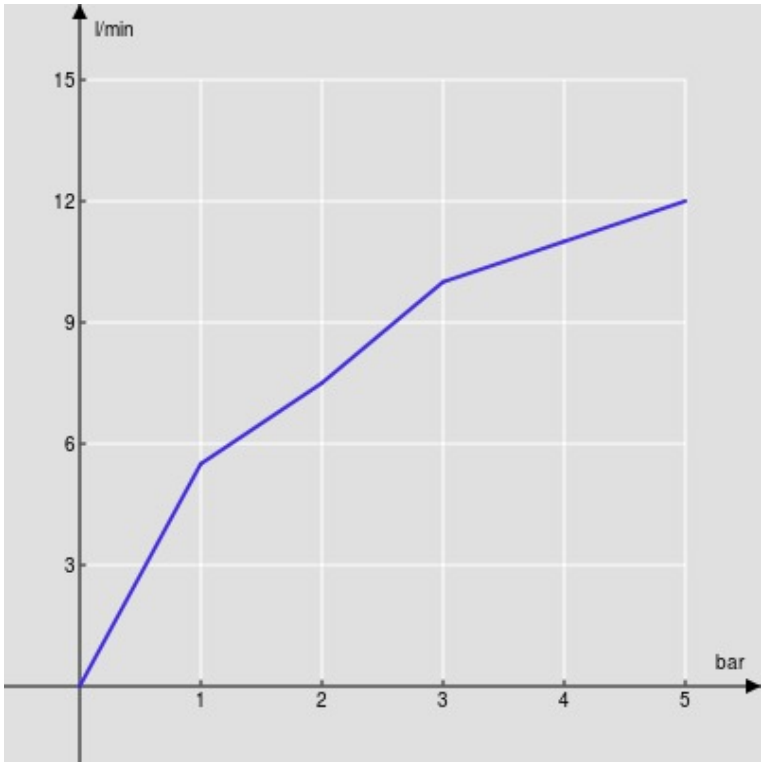

Aerator