LAMP
MP119400IX

NOBILI

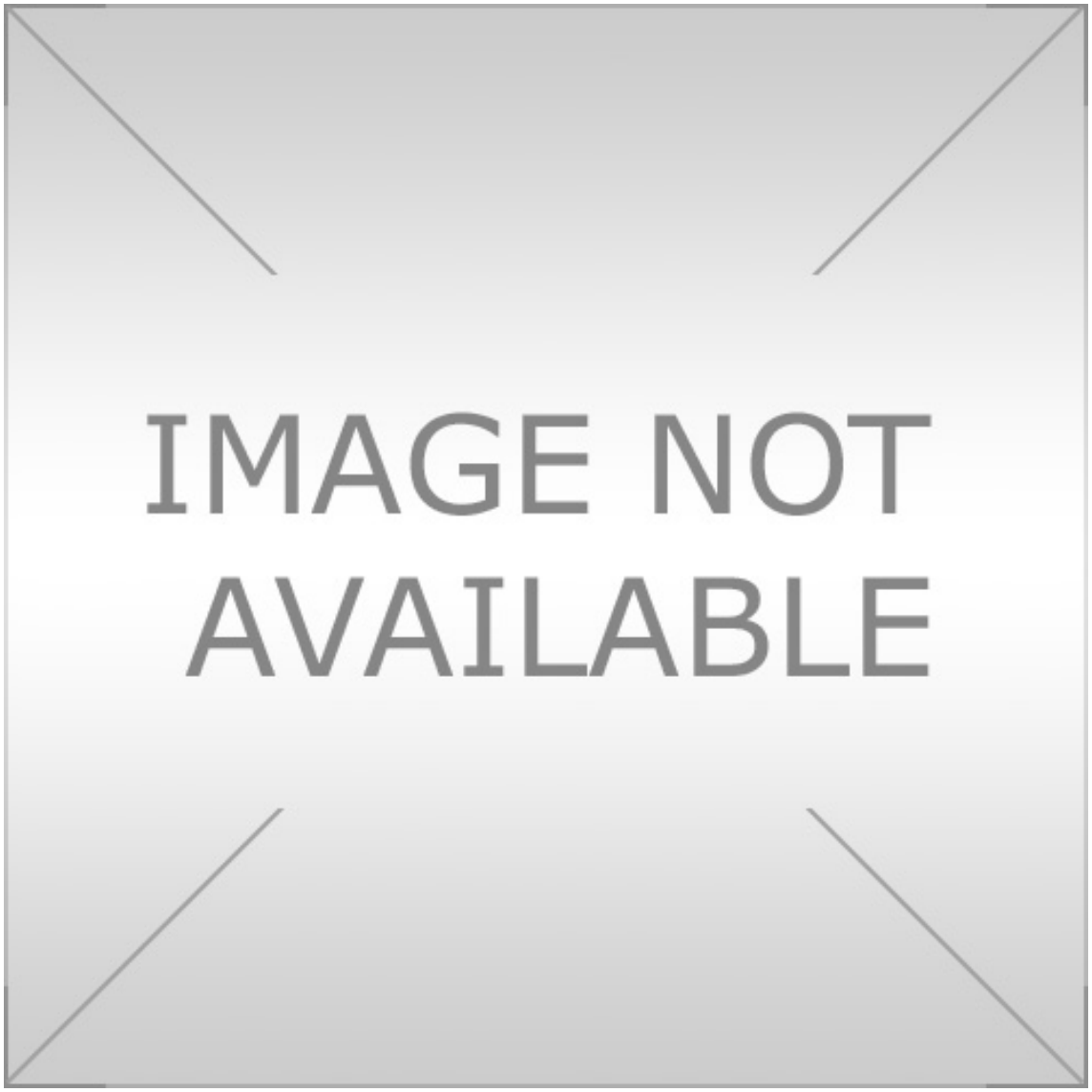

SPECIFICATIONS

Single control
Inox
360° swivel spout
Directional 2 jet swivel shower head with magnetic clip
ø 3/8" stainless steel flexible pipe
50% two step cartridge for water saving
Packaging: 66 x 34,5 x 7 cm / 0,01594 m^3 / 2,28 kg

CERTIFICATIONS

BELGAQUA
ATTESTATION DE CONFORMITE SANITAIRE ACS

carlo nobili spa rubinetterie - via novara 29, suno (no) italia - office +39 0322 885885 - fax +39 0332 858091 - mail info@nobili.it - web nobili.it

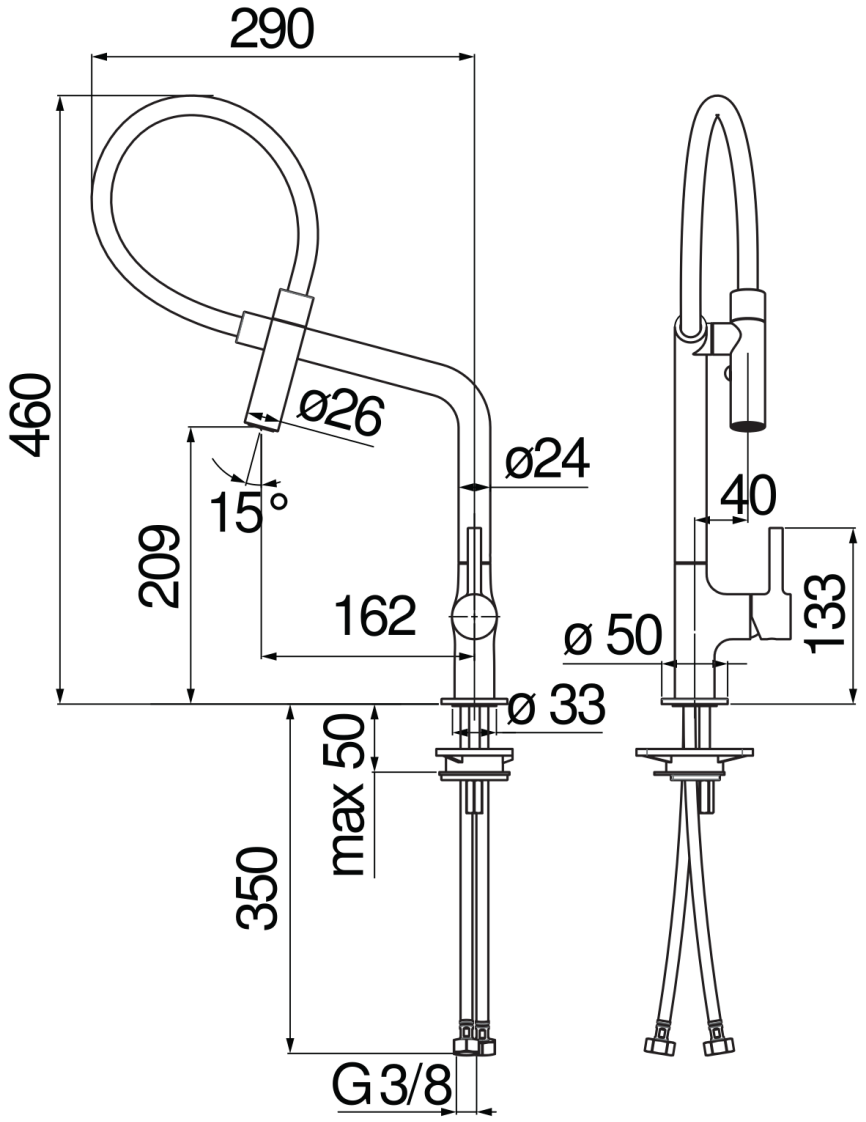
290
460
ø26
ø24
15°
209
162
40
133
ø 50
ø 33
max 50
350
G3/8

FLOW RATE DIAGRAM: HOT/COLD WATER

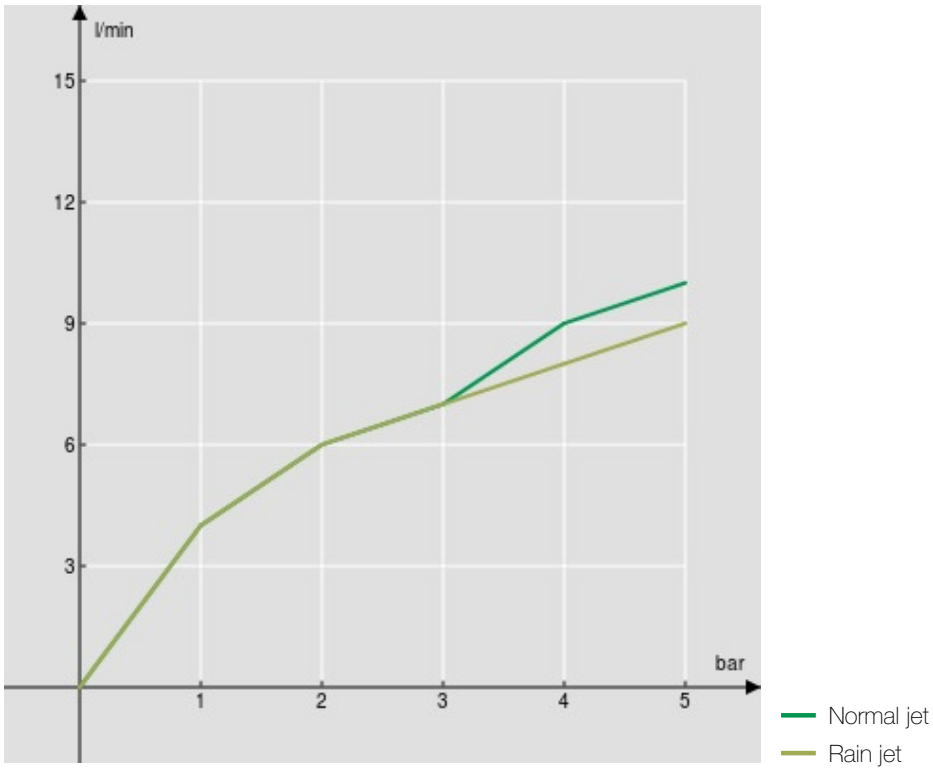
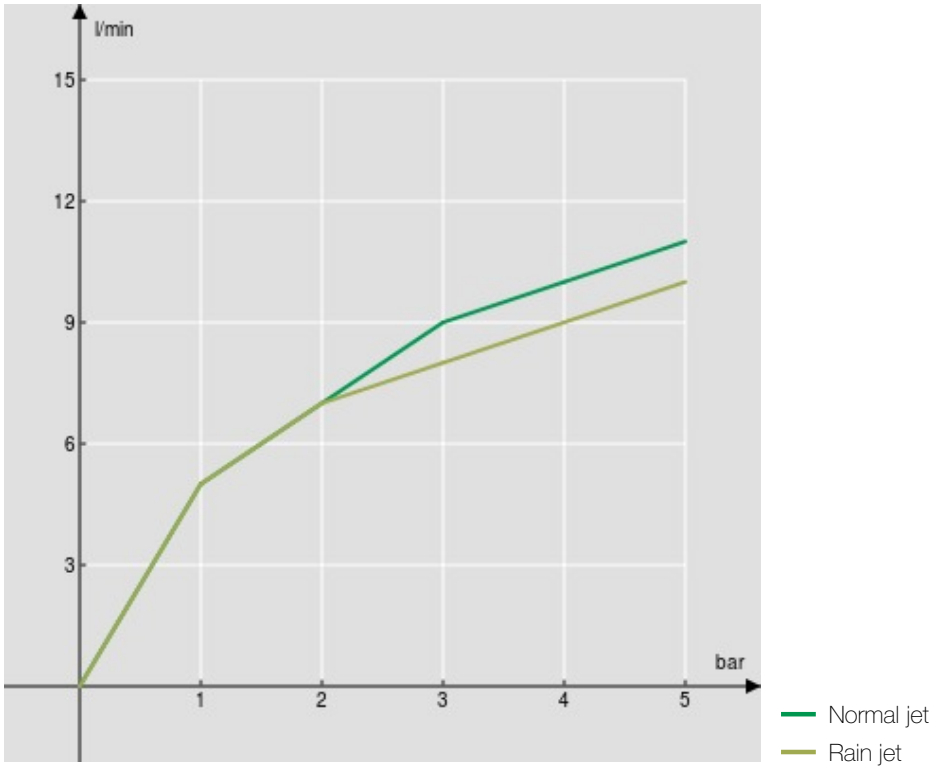
FLOW RATE DIAGRAM: MIXED WATER