WELLBOX
WE00101/TIX

NOBILI

SPECIFICATIONS

1-way external part
Inox
38° C safety cut-out
Vertical or horizontal assembly
Packaging: 33 x 17 x 7 cm / 0,00393 m^3 / 0,86 kg

CERTIFICATIONS

BELGAQUA

ACS

carlo nobili spa rubinetterie - via novara 29, suno (no) italia - office +39 0322 885885 - fax +39 0332 858091 - mail info@nobili.it - web nobili.it

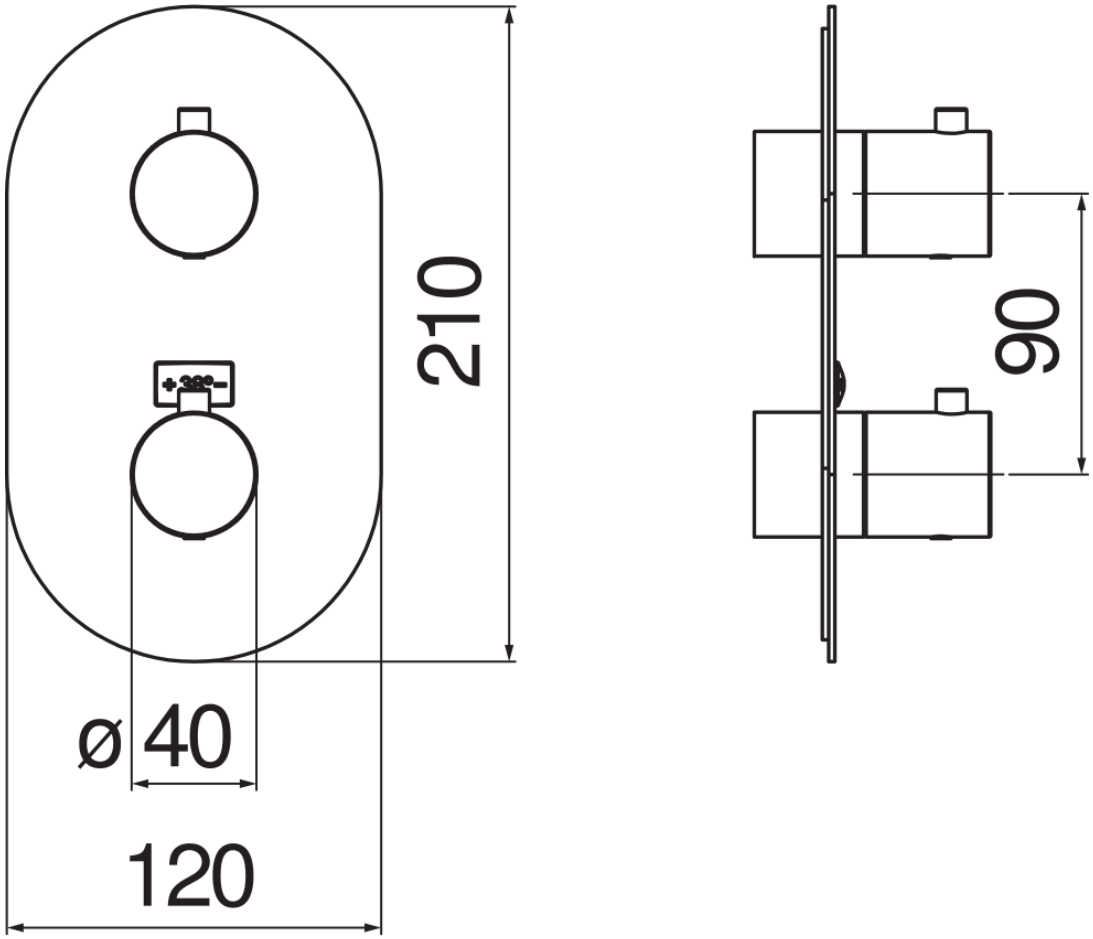
210
90
ø 40
120