1

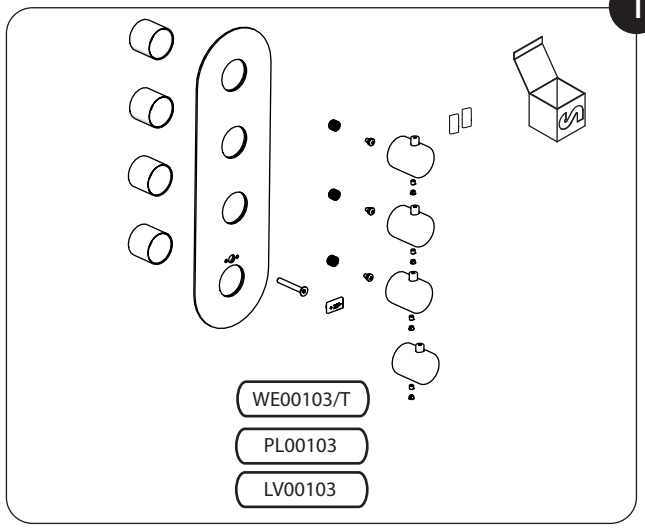

+

Not included / Non incluso /Non Inclus / Nie zawarty/ No incluido / Nao incluido

2

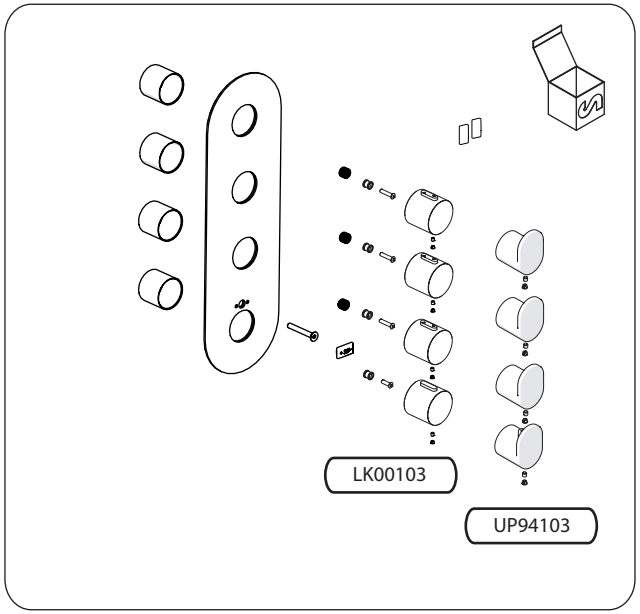

3

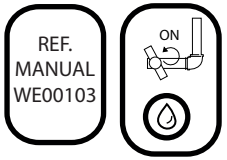

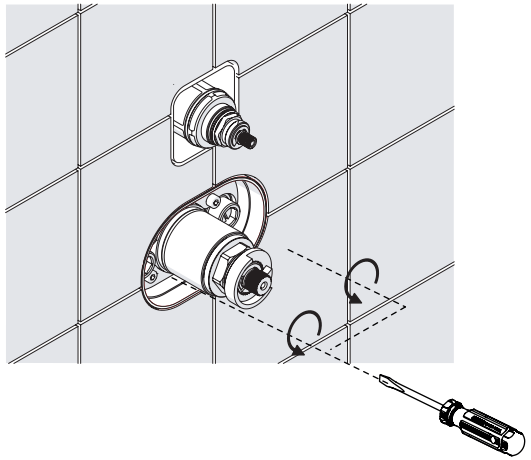

4

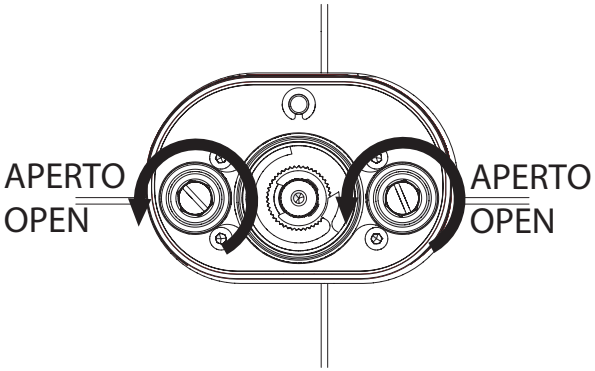

5

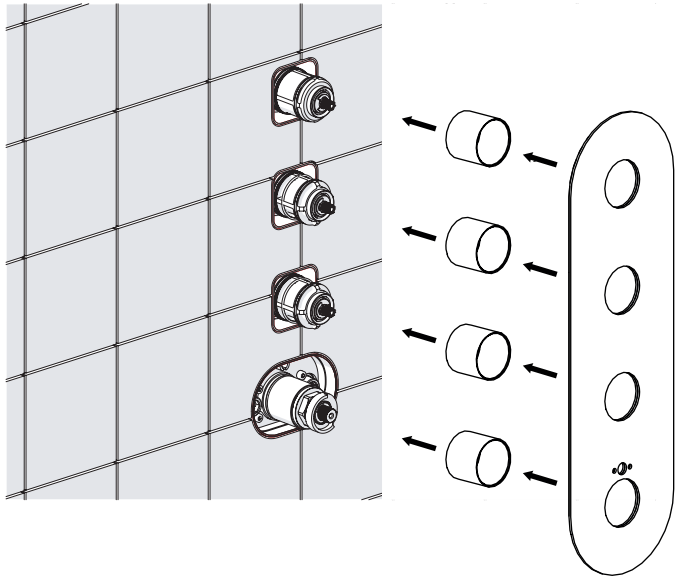

6

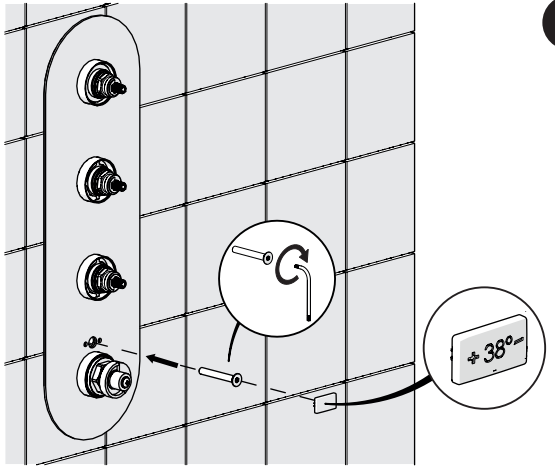

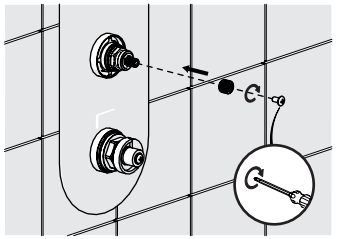

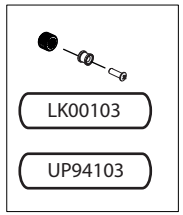

7

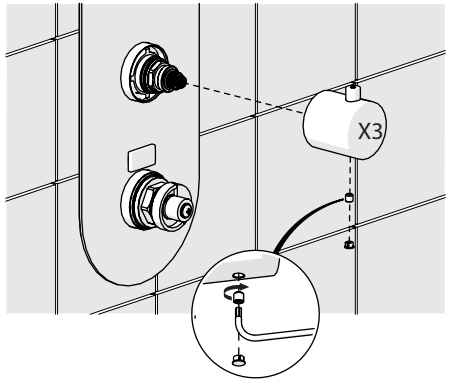

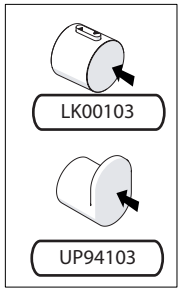

9

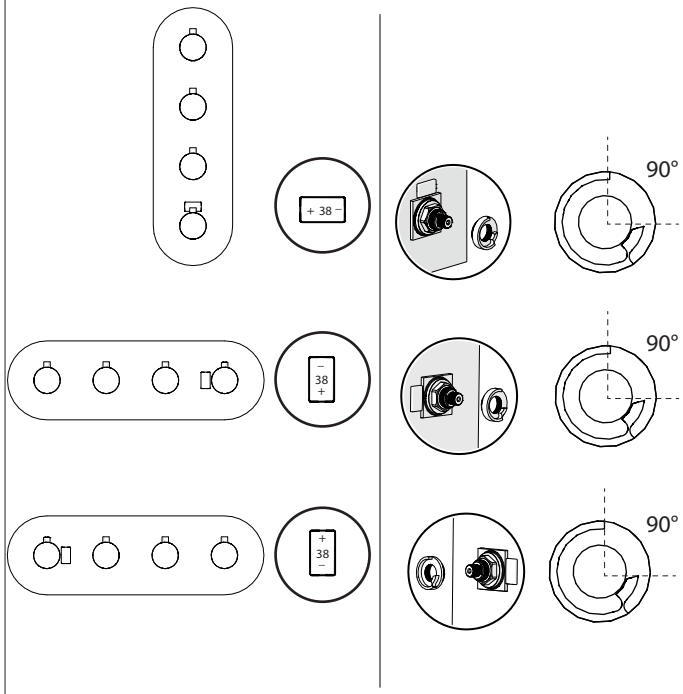

NOBILI®

The Best Technology for Water

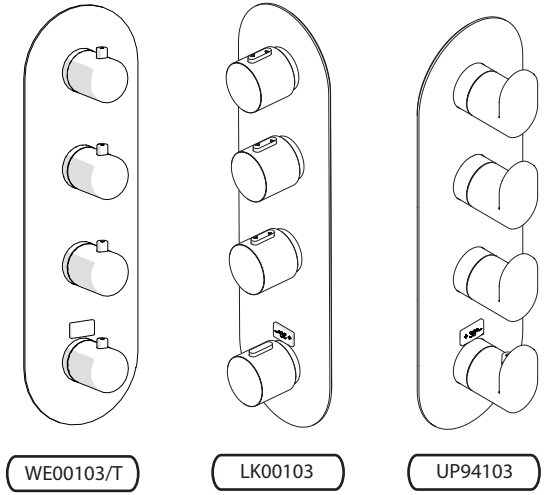

www.grupponobili.it

IISTR00103/T#---STD

REV02.02/2017

8

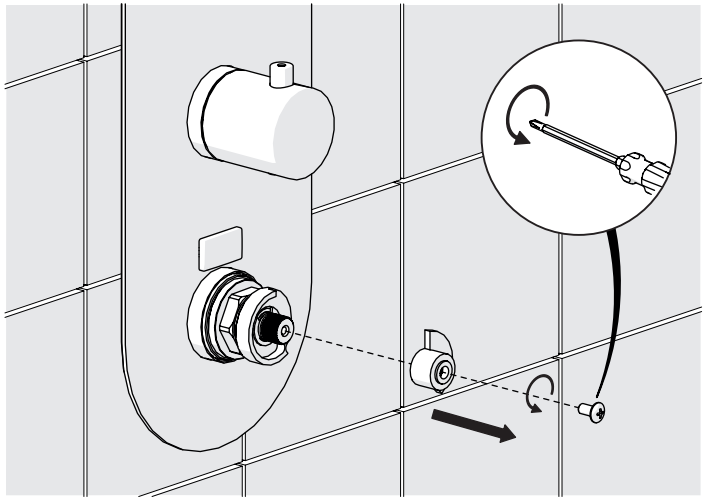
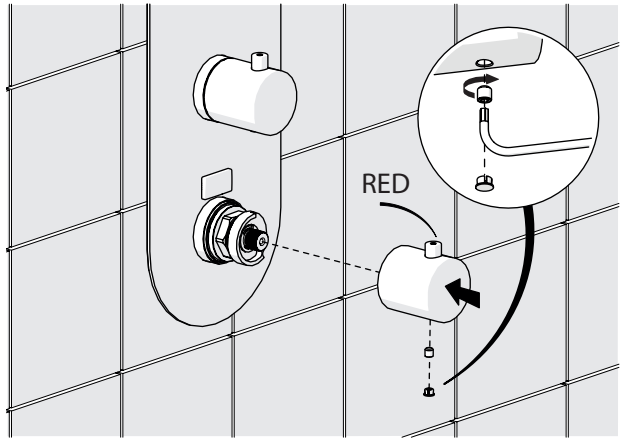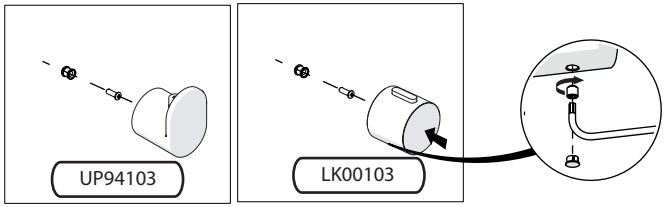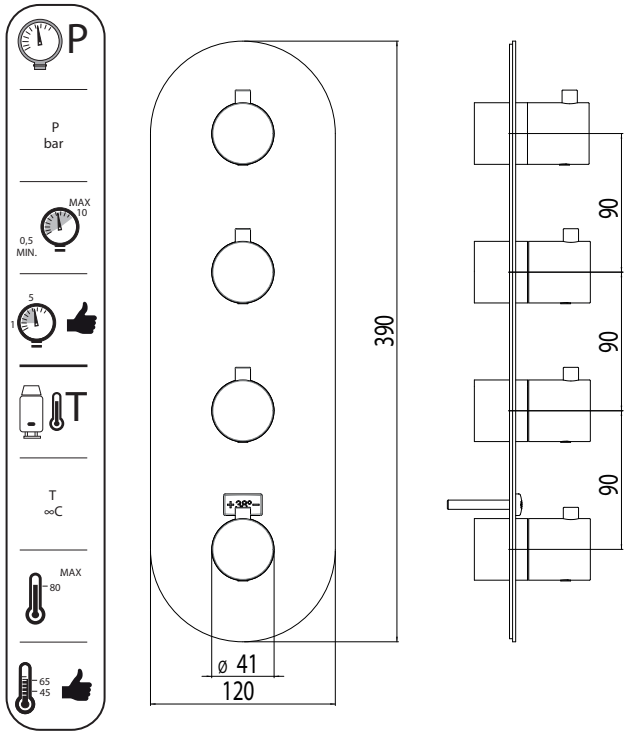
10